SOKOLOVA, A.A.; BURMISTROVA, Ye.M.; YALYNNAYA, F.I.; BRODYANSKAYA, Ye.I.; SHIRYAYEVA, K.K.; LEONOVA, V.F.; KOTEL'NIKOVA, Z.V.

Treatment of pericementitis in one visit. Stomatologiia 39 no.1: 15-17 Ja-F '60. (MIRA 14:11)

1. Iz TSentral'noy polikliniki Ministerstva vnutrennikh del SSSR (nachal'nik M.D. Kormilitsyn).
(GUMS--DISEASES)

ACC NR: AP6031128 SOURCE CODE: UR/0197/66/000/008/0127/0131

AUTHOR: Yalynskaya, A. K.

ORG: Institute of Organic Synthesis, Academy of Sciences, LatSSR (Institut organicheskogo sinteza AN LatSSR)

TITLE: Selective effect of certain alkylating agents on nucleic acid synthesis by staphylococcus aureus and its mutants

SOURCE: AN LatSSR. Izvestiya, no. 8, 1966, 127-131

TOPIC TAGS: alkylation, nucleic acid, staphylococcus aureus, chemotherapy, metabolic product, cytology, DNA, RNA

ABSTRACT: Alkylating agents cause antimitotic, mutagenic and carcinogenic changes in the living cells, as a result of their action on nucleic acids and nucleoproteins. Bifunctional compounds are the most effective and the compounds tested all contained two ethyleneimino groups. The effect of varying concentrations of phosphoric and thiophosphoric acid diethyleneimides on stock and mutant *Staphylococcus aureus* cultures was determined. Compounds tested were: ThioTEPA, thiazolidothiophosphoric diethyleneimide (I), thiazolidophosphoric diethyleneimide (II), 2-methylthiazolidophosphoric diethyleneimide (III), and thio-

Card 1/2

ACC NR: AP6031128

morpholidothiophosphoric diethyleneimide (VIII). Changes in nucleic acid content were determined and expressed as a percent of controls. Differences in nucleic acid synthesis caused by the compounds is presented below (in %).

Compound	Parent Strain		Mutant Strain	
	DNA	RNA	DNA	RNA
ThioTEPA	15	11	39—40	23—25
I	35	24	40—41	22
II	19	12	29—34	20—21
III	Similar to	compound II		15—13
VIII	20	15	28—29	15—13

Small concentrations of a compound did not always produce changes, and in some cases even stimulated synthesis. There was a consistent low percentage of mutant cultures which apparently mutated under the effect of these compounds. [WA-50; CBE No. 12]

SUB CODE: 06/ SUBM DATE: 12Feb66/ ORIG REF: 012/ OTH REF: 005

Card 2/2

YALYSKAYA, N. S.

Yalyskaya, N. S. "A hydrobiological survey of the lakes of the Shatskaya group in Volyn Oblast", Trudy Nauch.-issled. in-ta prudovogo i ozerno-rech. ryb. khoz-va, No. 6, 1949, p. 133-51, - Bibliog: 8 items.

SO: U-4392, 19 August 53, (Letopis 'Zhurnal 'nykh Statey, No 21, 1949).

YALYNSKAYA, N. S.

"The Biological Basis for the Rebuilding of the Fishing Economy of the Sharska Lake Group in Volynskaya Oblast." Cand Biol Sci, L'vov State U, L'vov, 1953. (RZhBiol, No 1, Sep 54)

SO: Sum 432, 29 Mar 55

REZVOY, P.D.; YALYNSKAYA, N.S.

Method of estimating the biomass of plankton and benthos. Zool. zhur. 39 no.8:1250-1252 Ag '60. (MIRA 13:8)

1. Lwov State University.
(Hydrobiological research)

YALYNSKAYA, N.S.

Pontocaspian immigrants from the genus Dikerogammarus (Crustacea, Amphipoda) at the sources of the Dniester River. Zool. zhur. 44 no.9:1328-1332 '65. (MIRA 18:10)

1. L'vovskiy gosudarstvennyy universitet.

REZVOY, P.D.; YALYNSKAYA, N.S.

Spongillidae as fish food in carp ponds. Zool.zhur. 41 no.10: 1567-1568 O '62. (MIRA 15:12)

1. State University of Lvov.
(Ukraine, Western—Carp)
(Ukraine, Western—Spongillidae)
(Fishes—Food)

GORRENKO, F.P.; SHEVCHUK, I.A.; YALYNSKAYA, Ye.V.

Photocolorimetric determination of microgram quantities of nickel in lead salts. Trudy IREA no.25:325-328 '63.
(MIRA 18:6)

KACHURIN, L.G.; TOLSTOBROV, B.Ya.; YALYNYCHEV, N.S.

Stationary photoelectronic anemogradiograph with an automatic digital device for averaging the results of measurements. Trudy Len. gidromet. inst. no.15:137-144 '63.
(MIRA 17:1)

PRUDOVSKIY, I.I.; YALYNYCHEV, N.S.

Devices for shaping square pulses from electric signals with random form of infralow frequencies. Trudy Len. gidromet. inst. no.15:145-149 '63. (MIRA 17:1)

KACHURIN, L.G.; TOLSTOBROV, B.Ya.; USHAKOV, V.M.; YALYNYCHEV, N.S.

Stationary automatically self-balancing thermogradiograph. Trudy Len. gidromet. inst. no.15:161-170 '63.

Unbalanced field thermogradiograph. Ibid.:171-179 (MIRA 17:1)

ACC NR: AP7005616 SOURCE CODE: UR/0413/67/000/002/0055/0055

INVENTOR: Yalyshev, A. U.; Levinson, B. A.

ORG: None

TITLE: An electronic controller. Class 21, No. 190456 [announced by the Scientific Research Institute of Heat and Power Engineering Equipment (Nauchno-issledovatel'skiy institut teploenergeticheskogo priborostroyeniya)]

SOURCE: Izobreteniya, promyshlennyye obraztsy, tovarnyye znaki, no. 2, 1967, 55

TOPIC TAGS: automatic control equipment, electronic equipment

ABSTRACT: This Author's Certificate introduces an electronic controller containing a computing amplifier with a potential coupling loop which has a differential capacitor in the forward circuit and an integrating RC network in the feedback circuit. The controller also incorporates input and output potentiometers. A wider range of useful applications for the instrument is provided by including an auxiliary conventional bridge circuit consisting of two cross-connected potentiometric dividers with rigidly linked sliding contacts connecte/ in parallel with the output terminals of the regulator. The terminals for one of the dividers are connected respectively to the potential loop and to the differential capacitor, while the terminals of the input potentiometer are connected to a tunable integrating capacitor through a variable resistor with slid-

Card 1/2 UDC: 621-551.454

ACC NR: AP7005616

ing contact rigidly linked to the sliding contact of a variable resistor in the feedback circuit. The control shaft of the tunable integrating capacitor is rigidly linked to that of the tunable differentiating capacitor.

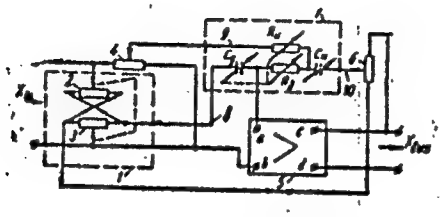

1--bridge circuit; 2-4 and 6--low-resistance potentiometric dividers; 5--operational amplifier; 7-10--dynamic connections

SUB CODE: 09/ SUBM DATE: 11Dec65

Card 2/2

VOLCHKOV, I.; YALYSHEV, P.

Development of business accounting at the Ural Railroad Car Construction Plant. Sots.trud 4 no.11:109-116 N '59. (MIRA 13:4)

1. Nachal'nik tsekha ram i ferm Uralvagonzavoda(for Volchkov).
2. Nachal'nik byuro organizatsii truda i zarabotnoy platy tsekha chugunnogo i tsvetnogo lit'ya Uralvagonzavoda (for Yalyshev).
(Railroads--Cars--Construction)

KRASNICHENKO, L.V., kand. tekhn. nauk; YALYSHEV, R.G., inzh.

Nickel-free alloy for hard facing of the operating parts of earth working machinery. Svar. proizv. no.6:19-20 Je '65. (MIRA 18:8)

1. Rostovskiy-na-Donu institut sel'skokhozyaystvennogo mashinostroyeniya.

ARKHANGEL'SKIY, G.A.; YALYSHEV, V.A.

Compressor signaling system for municipal telephone cable networks. Vest. sviazi 25 no. 11 6-10 N '65. (MIRA 18:12)

1. Nachal'nik laboratorii Kiyevskogo otdeleniya TSentral'nogo nauchno-issledovatel'skogo instituta svyazi Ministerstva svyazi SSSR (for Arkhangel'skiy). 2. Starshiy inzhener Kiyevskogo otdeleniya TSentral'nogo nauchno-issledovatel'skogo instituta svyazi Ministerstva svyazi SSSR (for Yalyshev).

ARKHANGEL'SKIY, Georgiy Aleksandrovich; LEVINOV, Konstantin Georgiyevich; YALYSHEV, Vladimir Aleksandrovich; ULANOVSKAYA, N.M., red.; SLUTSKIN, A.A., tekhn. red.

[Retainment of pressure in telecommunication cables] Soderzhanie kabelei sviazi pod davleniem. Moskva, Sviaz'izdat, 1962. 93 p. (MIRA 16:3)

(Electric cables) (Telephone lines)

BELOV, N.V., inzh.; NOYEV, V.N., inzh.; OBRAZTSOVA, N.V., inzh., red.; YALYSHEV, Z.S., inzh., red.; KOPEYKINA, L.V., red.

[Methods of industrial thermochemical testing of barrel boilers] Metodika ekspluatatsionnykh teplokhimicheskikh ispytanii barabannykh kotlov. Moskva, Izd-vo "Energiia," 1964. 126 p. (MIRA 17:6)

1. ORGRES, trust, Moscow.

MIKHEYEV, Valentin Aleksandrovich; YAM, Vladimir Mozusovich; POLYAKOV, Boris Ivanovich; GOLOSKOV, E.I., inzh., retsenzent; OBOLDUYEV, G.T., inzh., red.; BORODULINA, I.A., red. izd-va; KUREPINA, G.N., red. izd-va; PETERSON, M.M., tekhn. red.; BARDINA, A.A., tekhn. red.

[Modernization of hydraulic press equipment] Modernizatsiia gidropressovogo oborudovaniia. Moskva, Gos. nauchno-tekhn. izd-vo mashinostroit. lit-ry, 1961. 248 p. (MIRA 14:8)
(Hydraulic presses--Technological innovations)

YAM, V.M.; VERNIKOVSKIY, V.Ye.

Performance of charging hoppers during the filling of pressure molding dies for large-block products. Ogneupory 30 no.8:11-16 '65. (MIRA 18:8)

1. Vsesoyuznyy institut ogneuporov.

YAM, V.M., inzh.; LATIN, A.P., inzh.; GORODKOV, A.F., inzh.; GAGARIN, A.A., inzh.; MAYOROVA, TS.M., inzh.; SHMAKINA, N.N., inzh.; GUSEV, A.S., inzh.

Developing an experimental 1,000 ton hydraulic press for the pressing of 300 mm.-high refractory products. Trudy Inst. ogneup. no.34:141-163 '63. (MIRA 17:10)

1. Vsesoyuznyy institut ogneuporov (for Shmakina). 2. Trest "Ogneupornerud" (for Gusev).

YAM, V.M.

Selecting a pumping system discharge rate for hydraulic presses in the manufacture of refractory materials. Ogneupory 28 no.6: 253-255 '63. (MIRA 16:6)

1. Vsesoyuznyy institut ogneuporov.
(Refractories industry—Equipment and supplies)

YAM, V.M., inzh.; KOBA, G.A.; GOLOSKOV, E.I.

Investigating stresses in frames of hydraulic press housings. Trudy Inst. ogneup. no.35:137-158 '63. (MIRA 17:12)

1. Vsesoyuznyy institut ogneuporov (for Koba). 2. Leningradskiy zavod "Metallist" (for Goloskov).

ZHOLOBOV, V.V.; ZVEREV, G.I.; YAM, V.M., inzh., retsenzent

[Dies for the hot pressure working of metals] Instrument dlia goriachego pressovaniia metallov. Moskva, Mashinostroenie, 1965. 161 p. (MIRA 18:2)

moval of the plate after the pressing operation. The app... includes a metal form mounted in an elec. circuit through which a weak current [illegible] electrodeposits [illegible]

YAMALETDINOV, M.A.

Two-way connection between two automatic telephone stations along one circuit. Transp. i khran. nefti i nefteprod. no.8:31 '64. (MIRA 17:9)

1. Yazykovskaya nefteperekachechnaya stantsiya.

YAMALEYEV, G.

How we mastered the new installation. Mias.ind.SSSR 26 no.6:53-54 '55. (MLRA 9:2)

1.Zaveduyushchiy laboratoriyey Bugul'minskogo ptitsekombinata.
(Eggs, Dried)

S/139/62/000/004/006/018
E114/E435

AUTHOR: Yamaleyev, K.M.

TITLE: Investigation by X-ray diffraction of the anomalous decomposition of a super-saturated solid solution of zinc in aluminium in the α + α' region

PERIODICAL: Izvestiya vysshikh uchebnykh zavedeniy. Fizika, no.4, 1962, 83-86.

TEXT: Specimens 12 mm in length by 0.5 to 0.8 mm diameter, with a grain size of 0.2 to 0.5 mm were employed. Isothermal treatments at 290, 300 and 310°C were carried out for 1, 2, 4, 8, 16, 30, 60 and 120 minutes. An X-ray tube was used with a potential of 30 kV and a current of 20 mA, with an exposure time of 6 hours. The changes in diffraction patterns after heating were very similar at all three temperatures. After 1 to 3 min at 300°C a diffraction pattern typical of second stage decomposition was obtained. Increase in the holding time at this temperature resulted in the development of normal diffraction patterns. A Debye ring was not observed in the X-ray photographs taken in the α + α' region. The changes in the X-ray pattern were

Card 1/2

explained by the formation of the α' phase. The first-stage decomposition was not observed because at the temperatures concerned the thermal movements of the atoms was intense and nuclei of the α' phase grew rapidly. There are 3 figures.

ASSOCIATION: Bashkirskiy gosuniversitet
(Bashkirian State University)

SUBMITTED: December 7, 1960

YAMAIKYEV, K.M.

Diffuse diffraction effects at an early stage of ordering of a CoPt alloy and their calculation in the case of cylindrical photographs. Izv.vys.ucheb.zav.;fiz.no. 2:121-125 '64. (MIRA 17:6)

1. Bashkirskiy gosudarstvennyy universitet imeni 40-letiya Oktyabrya.

ACCESSION NR: AP4034035 S/0020/64/155/006/1310/1313

AUTHOR: Tyapkin, Yu. D.; Yamaleyev, K. M.

TITLE: Crystal lattice distortions in the initial stage of the ordering process of Co Pt alloy

SOURCE: AN SSSR. Doklady*, v. 155, no. 6, 1964, 1310-1313 and top half of insert facing p. 1312

TOPIC TAGS: alloy ordering process, Co Pt crystal lattice, magnetic alloy, alloy aging, X-ray diffraction, crystallography, alloy, crystal lattice distortion

ABSTRACT: The Co-Pt alloys of a stoichiometric composition have very high coercive force and high magnetic energy. The changes of their crystalline structure during the ordering process have not as yet been adequately investigated. The authors studied a Co Pt alloy with 48.57 at m% Co by X-ray diffraction and by the method (Kristallografiya 9, #2, 213 1964) involving the use of single crystals of microscopic dimentions (20 to 100 microns). The single crystals were first quenched from 1000 to 1100 C. The ordering process was investigated at 450 and 600 C. The crystalline structure were identified from the X-ray patterns. The

Card 1/2

ACCESSION NR: AP4034035

essential features of the structure were similar to those observed previously by the authors during the aging of Ni-Be and Cu-Be. Orig. art. has: 4 figures.

ASSOCIATION: None

SUBMITTED: 06Nov63 DATE ACQ: 20May64 ENCL: 00

SUB CODE: SS,MM NO REF SOV: 004 OTHER: 004

Card 2/2

YAMALEYEV, K.M.; TYAPKIN, Yu.D.

X-ray examination of structural changes during the ordering of single crystals of the NiPt alloy. Fiz. met. i metalloved. 19 no.1:141-144 Ja '65. (MIRA 18:4)

1. Institut metallofiziki Tsentral'nogo nauchno-issledovatel'nogo instituta chernoy metallurgii imeni Bardina.

YAMALEYEV, K.M.

Structural changes in a CoPt alloy during ordering. Izv. vys. ucheb. zav.; fiz. 8 no.2:146-149 '65. (MIRA 18:7)

1. Bashkirskiy gosudarstvennyy universitet imeni 40-letiya Oktyabrya.

L 53688-65 EWT(m)/EWP(w)/EWA(d)/T/EWP(t)/EWP(b)/EWA(c) Pad IJP(c) JD/HW/JG

ACCESSION NR [illegible]

[illegible]

TITLE: Changes in the crystal lattice and magnetic properties of [illegible] alloy during ordering

[illegible]

ABSTRACT: Two groups of specimens prepared from single crystals of a [illegible] (51.3 at % Pt) were studied by x ray analysis and magnetic measurements. Specimens of group A were heated to 1000°C, held for 2 hrs at this temperature and then [illegible]

Card [illegible]

L 53688-65

ACCESSION NR: AP5008781

This phase possesses a high constant of anisotropy and high magnetic hardness. The formation of particles of an ordered phase with a tetragonal lattice causes heterogeneous elastic "monoclinic" distortions in the unordered matrix surrounding these particles. This produces a considerable qualitative change in the magnetic [illegible]

[illegible] axis of the matrix. In this state, magnetization of the alloy in fields up to 118-398 ka/m is quite difficult. When magnetizing Co-Pt alloys in the state with maximum [illegible] force, a substantial [illegible] by reversible processes in the [illegible] change [illegible] reverse [illegible]

Card 2/3

L 53688-65

ASSOCIATION: Filial Instituta khimicheskoy fiziki AN SSSR (Affiliate of the Ins-

SUBMITTED: 20Apr64 ENCL: 00 SUB CODE: IM, MM

NO REF SOV: 007 OTHER: 007

Card 3/3

RABIN'KIN, A.G., TYAPKIN, Yu.D.; YAMALEYEV, K.M.

Changes in the crystal structure and magnetic properties of the Co-Pt alloy in the ordering process. Fiz. met. i metalloved. 19 no.3:360-366 Mr '65. (MIRA 18:4)

1. Filial Instituta khimicheskoy fiziki AN SSSR i TSentral'nyy nauchno-issledovatel'skiy institut chernoy metallurgii imeni Bardina.

Yamaliev, V. Ya., Jos. d .

Mechanization of loading-unloading work in auto transport Moskva, Gos. nauchno-tekhn. izd-vo mashinostroit. lit-ry, 1952. 113 p. (V pomoshch' shoferu-stotysiachniku) (54-18048)

TS159.D4

L 40204-66 EWT(d)/EWP(e)/EWP(v)/T/EWA(k)/EWA(1) IJP(c) RM

ACC NR: AP6030053 SOURCE CODE: UR/0114/66/000/004/0002/0008

64

B

AUTHOR: Polishchuk, V. L. (Engineer); Orlov, M. D. (Engineer); Chernin, Ye. N. (Engineer); Reznichenko, V. Ya. (Engineer); Kotov, Yu. V. (Engineer); Bodrov, I. C. (Engineer); Yamalutdinov, I. T. (Engineer); Ol'khovskiy, G. G. (Candidate of technical sciences)

ORG: none

TITLE: Results of testing first model and series examples of gas turbines GTN-9-750 of Leningrad Metallurgical Plant im. XXII CPSU Congress

SOURCE: Energomashinostroyeniye, no. 4, 1966, 2-8

TOPIC TAGS: gas turbine, pipeline, centrifugal pump, electric power production, turbine design, turbine compressor/GTN-9-750 gas turbine, NG-280-9 centrifugal pump

ABSTRACT: A description of the testing of the 9000 kw GTN-9-750 gas turbine, designed to drive the NG-280-9 centrifugal pipeline pump, used on the Bukhara-Ural gas pipeline. The tests showed that the actual power produced in operating conditions is 8,750 kw, efficiency 25%. The maximal power produced without additional equipment and regenerators is 9600-10,000 kw. The characteristics of the main elements of the turbine were found to be near the design characteristics: the adiabatic efficiency of the compressor is 89%, the low and high pressure turbine sections operate at 85% and 89-90% efficiency. Long-term testing with repeated stops and starts showed that the unit as modified from the prototype is suitable for operation in the gas pipeline system. Orig. art. has: 5 figures, 7 formulas and 3 tables. [JPRS: 36,501]

SUB CODE: 13, 10 / SUBM DATE: none / ORIG REF: 002

UDC: 621.438.001.41

Card 1/2

YAMANOV, Aleksey Aleksandrovich, general-mayor v otstavke; KUROCHKIN, P.A., general armii, otv.red.; MOROZOV, B.N., polkovnik, red.; ZUDINA, M.P., tekhn.red.

[Meeting engagement] Vstrechnyi boi. Moskva, Voen.izd-vo M-va obor.SSSR. Vol.1. [Tactical and operational analysis on a historical basis] Operativno-takticheskoe issledovanie na voenno-istoricheskoi osnove. Otvetstvennyi red. P.A.Kurochkin. 1959. 264 p. (MIRA 13:3)

(Military art and science)

YAMANOV, S. A., jt. au.

Andrianov, Kuz'ma Andrianovich

Organic dielectrics and their application in the industry of means of communication. Moskva, Gos. energ. izd-vo, 1949. 138 p. (50-21897)

QC585.A62

YAMANOV, S. A.

USSR/Electricity
Dielectrics
Bibliography

Mar 49

PA 38/49T16

"Review of 'Magneto-Dielectrics and Ferro-Coils' by L. I. Rabkin and N. N. Shol'ts," S. A. Yamanov, Cand Tech Sci, All-Union Electrotech Inst imeni Lenin, 1½ pp

"Elektrichestvo" No 3

Claims book is of great value because it systematizes considerable part of existing material on high-frequency magneto-dielectrics and ferro-coils, though it has some shortcomings.

[redacted]

38/49T16

USSR/Electricity (Contd)

Mar 49

Mentions informational data which can be used for construction and computations; however, data is insufficient for scientific analysis.

[redacted]

38/49T16

YAMANOV, S. A

USSR/Engineering
Publications
Scientists

Jun 49

"Dissertions at the All-Union Electrical Engineering Institute imeni Lenin," I. S. Kunts, Cand Tech Sci, 1 p

"Elektrichestvo" No 6

Annotations on seven dissertations for degree of candidate of technical sciences include: S. I. Dzhenchel'skaya's "High-Polymeric Compounds as Gas-Generating Materials," I. A. Poltayev's "Testing Arbitrary Extinction of a Gas Discharge," and S. A. Yamanov's "Dependence of Dielectric Losses Upon the Chemical Composition of High-Polymeric Organic Compounds."

PA 54/49T55

YAMANOV, S.A.; SACHKOV, D.D.; ARSHINOV, S.S., redaktor; LARIONOV, G.Ye., tekhnicheskiy redaktor.

[Methods of protecting radio parts from moisture] Metody zashchity radiodetalei ot vlagi. Moskva, Gos. energet. izd-vo, 1951. 77 p. [Microfilm]

(Radio--Apparatus and supplies) (MLRA 8:1)

YAMANOV, S. A.

PHASE X TREASURE ISLAND BIBLIOGRAPHICAL REPORT AID 691 - X

BOOK

Authors: DROZDOV, N..G., NIKULIN, N. V., PRIVEZENTSEV, V. A., FEDOROV, L. I. YAMANOV, S. A. Call No.: AF646811

Full Title: ELECTRICAL ENGINEERING MATERIALS

Transliterated Title: Elektromatieralovedeniye

PUBLISHING DATA

Originating agency: None

Publishing House: State Power Engineering Publishing House

Date: 1954 No. pp.: 397 No. of copies: 10,000

Editorial Staff

Editor: Drozdov, N. G., Dr. Techn. Science, Professor

PURPOSE AND EVALUATION: The book is designed as a textbook for tekhnicums and schools of electrical engineering and the electrical industry but may also be used as a reference gook by engineers, The book contains basic information on materials used in the electrical industry dielectrics, conductors and magnetic matirials giving their properties and testing. The information is presented in great detail Altogether the book has a considerable value for study of the matierials used by Soviet industry.

Note: See card for DROZDOV, N. G. for pages 2-5 of abstract.

Subject : USSR/Electricity AID P - 3042

Card 1/1 Pub. 27 - 29/33

Author : Yamanov, S. A., Kand. of Tech. Sci., Dotsent

Title : The sixth Weimar conference of electrical engineers in the German Democratic Republic

Periodical : Elektrichestvo, 7, 149, Jl 1955

Abstract : The annual meeting of the electrical engineers of the East German zone took place June 6-11, 1955. Two sections were active, one on strong and the other on weak currents. The author gives a list of reports and the names of the reporters.

Institution : None

Submitted : No date

8(0), 15(6)

SOV/112-59-2-2388

Translation from: Referativnyy zhurnal. Elektrotekhnika, 1959, Nr 2, p 15 (USSR)

AUTHOR: Yamanov, S. A.

TITLE: Tropical Resistance and Tropicalization of Electric Insulating Materials (Tropikoustoychivost' i tropicheskaya zashchita elektroizolyatsionnykh materialov)

PERIODICAL: Tr. 1-y Mezhvuzovsk. konferentsii po sovrem. tekhn. dielektrikov i poluprovodnikov. 1956, L., 1957, pp 124-134

ABSTRACT: Results are described of determination of fungus resistance (by CIE methods) of various resins, varnishes, enamels, plastics, and raw materials. Fungus-resistant materials are listed. The effect of fungicides on the fungus resistance of dielectrics is described. Introduction of di-8-oxichinolate into varnishes, enamels, and most plastics as a fungicide is recommended. Results of determination of moisture resistance of solid dielectrics are described. General recommendations are given for fungus resistance,

Card 1/2

SOV/112-59-2-2388

Tropical Resistance and Tropicalization of Electric Insulating Materials

moisture resistance, and tropicalization of materials used in electrical equipment. Vsesoyuznyy elektrotekhnicheskiy institut (All-Union Electrical-Engineering Institute) imeni V. I. Lenin, Moscow.

A.O.M.

Card 2/2

YAMANOV, S.A., kandidat tekhnicheskikh nauk.

Use of silicon organic compounds to protect electric insulation against moisture. Vest.elektroprom. 27 no.11:64-69 N '56. (MLRA 9:12)

1. Vsesoyuznyy elektrotekhnicheskiy institut imeni Lenina.
(Silicon organic compounds)
(Electric insulators and insulation)

86105

5.3700 2209, 2109

S/112/59/000/012/016/097
A052/A001

Translation from: Referativnyy zhurnal, Elektrotekhnika, 1959, No. 12, pp. 14-15, # 24019

AUTHOR: Yamanov, S.A.

TITLE: Making Dielectrics Hydrophobic With Silicoorganic Compounds

PERIODICAL: Tr. Vses. elektrotekhn. in-ta, 1958, No. 62, pp. 172-191

TEXT: An information on making a number of materials hydrophobic by using silicoorganic compounds is given. Organic polysiloxanes of linear and spatial structure with ethyl, methyl and phenyl radicals in side chains have high hydrophobic properties; they make also other materials hydrophobic with which they do not react chemically at treatment. Ceramic materials treated with alkyl- or arylsilane chlorides, organic polysiloxane liquids and varnishes acquire high hydrophobic properties. Silicate glasses are made hydrophobic when treated with hydrophobic silicoorganic compounds. Hydrogen-containing organic siloxane liquid ГКЖ-94 МХП (GKZh-94 MKhP) is recommended for rendering fabrics, papers and

Card 1/2

86105

S/112/59/000/012/016/097
A052/A001

Making Dielectrics Hydrophobic With Silicoorganic Compounds

vitreous fabrics hydrophobic. The technology of hydrophobic treatment of asbestos-cement developed by VEI (All-Union Electrotechnical Institute) increases hydrophobic properties of this relatively heat-resistant and cheap electro-insulating material.

A.O.M.

Translator's note: This is the full translation of the original Russian abstract.

Card 2/2

YAMAJIOV, S.A.

Waterproofing dielectrics by means of silicon organic compounds. Trudy VEI no.62:172-191 '58. (MIRA 11:11)
(Dielectrics)

AL'BITSKAYA, O.N.; LIVENTSEVA, N.D.; SHAPOSHNIKOVA, N.A.; YAMANOV, S.A.

Investigating the resistance of dielectrics to moisture and fungi in a moist tropical climate. Trudy VEI no.62:217-239 '58.
(Dielectrics) (MIRA 11:11)

SKANAVI, G.I.; YAMANOV, S.A., red.; BABOCHKIN, S.N., tekhn. red.

[Dielectric polarization and losses in glass and ceramic materials with a high dielectric permeability] Dielektricheskaia poliarizatsiia i poteri v steklakh i keramicheskikh materialakh s vysokoi dielektricheskoi pronitsaemost'iu. Moskva, Gos.energ.izd-vo, 1952. 174 p. (MIRA 15:2)
(Dielectrics)

BOGORODITSKIY, N.P.; VAVILOV, V.S.; VALEYEV, Kh.S.; DROZDOV, N.G.; KORITSKIY, Yu.V.; PRIVEZENTSEV, V.A.; RENNE, V.T.; TAREYEV, B.M.; YAMANOV, S.A.

B.M. Vul; on his 60th birthday and 35th anniversary of his scientific work. Elektrichestvo no.8:95 Ag '63. (MIRA 16:10)

TUMANOV, A.T., glav. red.; VYATKIN, A.Ye., red.; GARBAR, M.I., red.; ZAYMOVSKIY, A.S., red.; KARGIN, V.A., red.; KISHKIN, S.T., red.; KISHKINA-RATNER, S.I., doktor tekhn. nauk, red.; PANSHIN, B.I., kand. tekhn. nauk, red.; ROGOVIN, Z.A., red.; SAZHIN, N.P., red.; SKLYAROV, N.M., doktor tekhn. nauk, red.; FRIDLYANDER, I.N., doktor tekhn. nauk, red.; SHUBNIKOV, A.V., red.; SHCHERBINA, V.V., doktor geol.-miner. nauk, red.; SHRAYBER, D.S., kand. tekhn. nauk, red.; GENEL', S.V., kand. tekhn. nauk, red.; VINOGRADOV, G.V., doktor khoz. nauk, red.; NOVIKOV, A.S., doktor khoz. nauk,red.; KITAYGORODSKIY, I.I., doktor tekhn. nauk, red.; ZHEREBKOV,S.K., kand. tekhn. nauk, red.; BOGATYREV, P.M., kand. tekhn. nauk,red.; SANDOMIRSKIY, D.M., D.M., kand. tekhn. nauk, red.; BUROV, S.V., kand. tekhn. nauk, red.; POTAK, Ya.M., doktor tekhn.nauk, red.; KUKIN, G.N., doktor tekhn. nauk, red.; KOVALEV, A.I., kand.tekhn. nauk, red.; YAMANOV, S.A., kand. tekhn. nauk, red.; SHEFTEL', I.A., kand. khoz. nauk, st. nauchn. red.; BABERTSYAN, A.S., inzh., nauchn. red.; BRAZHNIKOVA, Z.I., nauchn. red.; KALININA, Ye.M., mlad. red.; SOKOLOVA, V.G., red.-bibliograf; ZENTSEL'SKAYA, Ch.A., tekhn. red.

[Building materials; an encyclopedia of modern technology] Konstruktsionnye materialy; entsiklopediia sovremennoi tekhniki. Glav. red. A.T.Tumanov. Moskva, Sovetskaia entsiklopediia. Vol.1. Abliatsiia - korroziia. 1963. 416 p. (MIRA 17:3)

1. Chlen-korrespondent AN SSSR (for Kishkin).

LAZAR, Milan; RADO, Rudolf; GOL'DBERG, G.M. [translator]; REINOL, V. [Reinohl], inzh., retsenzent; TOMIS, F., retsenzent; YAMANOV, S.A., red.

[Fluoroplasts. Translated from the Slovak] Ftoroplasty. Moskva, Energiia, 1965. 303 p. (MIRA 18:4)

APPROVED FOR RELEASE: 09/01/2001 CIA-RDP86-00513R001962020015-5"

GRUBNIK, N.N.; LERNER, M.M.; YAMANOVA, L.V.

Review of V.T.Renne's book "Electric condensers." Elektrichestvo no.1:95 Ja '61. (MIRA 14:4)
(Electric capacitors) (Renne, V.T.)

LERNER, M.M.; TAREYEV, B.M.; YAMANOVA, L.V.

"Film capacitors with organic synthetic dielectric" by V.T. Renne. Reviewed by M.M. Lerner, B.M. Tareev, and L.V. IAmanova. Elektrichestvo no.10:94 O '63. (MIRA 16:11)

RENNE, V.T., doktor tekhn.nauk, prof.; YAMANOVA, L.V., inzh.

"Synthetic liquid dielectrics" by K.A. Anrianov, and V.V. Skiperov. Reviewed by V.T. Renne, L.V. IAmanova. Elektrotekhnika 34 no.12:76 D '63. (MIRA 17:1)

YAMANOVA, L.V.; TAREYEV, B.M., doktor tekhn. nauk, prof., red.

[Electric condensers; lectures] Elektricheskie kondensatory; lektsii. Moskva, Vses. zaochnyi energ. in-t. No.1 1964. 84 p. (MIRA 18:3)

YAMASHEV, S. G., CAND VET SCI, "EFFECT OF NOVOCAINE BLOCK IN THE AREA OF THE STELLATE GANGLIONS ~~ON~~ upon THE COURSE AND ~~ORI-GIN~~ outcome OF EXPERIMENTAL PERICARDITIS IN ANIMALS AND CERTAIN PROBLEMS OF the PATHOGENESIS OF ACUTE ~~ATTACKS~~ affections OF PERICARDITIS." (EXPERIMENTAL WORKS)." OMSK, 1961. (MIN OF AGR RSFSR. OMSK STATE VET INST). (KL-DV, 11-61, 226).

KORZENKO, V.N.; SAYKOVSKAYA, V.A.; PROTASENYA, S.G.; KOLIYEV, M.F. (Severo-Osetinskaya ASSR); FEDYUSHKIN, M.Ye.; FEYTENGEYMER, V.A., kand. veter. nauk; YAMASHEV, S.G., kand. veter. nauk; AKHMETZYANOV, F.Kh., mladshiy nauchnyy sotrudnik; SHVETSOV, K.A., veterinarnyy vrach; GANIYEV, M.K., prof.; FARZALIYEV, I.A., dotsent

Smallpox in cattle. Veterinariia 41 no.7:31-34 Jl '64. (MIRA 18:11)

1. Belorusskiy institut epidemiologii i gigiyeny (for Korzenko, Saykovskaya, Protasenya). 2. Direktor Severo-Osetinskoy respublikanskoy veterinarnoy laboratorii (for Fedyushkin). 3. Kazanskiy veterinarnyy institut (for Feytengeymer, Yamashev, Akhmetzyanov, Shvetsov). 4. Azerbaydzhanskiy nauchno-issledovatel'skiy veterinarnyy institut (for Ganiyev, Farzaliyev).

Yamashkin, N.

KONEV, B.; SHUKHOV, O.; YAMASHKIN, N.; VAYS, A.

Improving the operation of K-80 carburetors. Avt.transp.33 no.7: 17-19 Jl'55. (MIRA 8:12)
(Automobiles--Engines--Carburetors)

ABUBAKIROV, N.K.; YAMATOVA, R. Sh.

Extraction of cymarin from the roots of adonis chrysocyathus. Dokl.AN Uz.SSR no.12:28-30 '59. (MIRA 13:5)

1. Institut khimii rastitel'nykh veshchestv AN UzSSR. Predstavleno akad. AN UzSSR. S.Yu. Yunusovym.
(Cymarin) (Adonis)

ABUBAKIROV, N.K.; YAMATOVA, R.Sh.

New material sources for obtaining strophanthin-K. Med.prom. 14 no.1:15-17 Ja '60. (MIRA 13:5)

1. Institut khimii rastitel'nykh veshchestv AN Uzbekskoy SSR.
(STROPHANTHIN)

ABUBAKIROV, N.K.; YAMATOVA, R.Sh.

Glucosides from Apocynum androsaemifolium L. Zhur.ob.khim. 30 no.6:2082-2085 Je '60. (MIRA 13:6)

1. Institut khimii rastitel'nykh veshchestv Akademii nauk Uzbekskoy SSR.
(Glycosides)

5.3610, 5.3900, 5.5400

78246
SOV/80-33-3-47/47

AUTHORS: Tibekov, E. Kh., Yamatova, R. Sh., Sadykov, A. S.

TITLE: Brief Communications. Polarographic Investigation of Raddeanine, Raddeamine and Alvanine

PERIODICAL: Zhurnal prikladnoy khimii, 1960, Vol 33, Nr 3, pp 751-752 (USSR)

ABSTRACT: Raddeanine ($C_{24}H_{39}O_2N$), raddeamine ($C_{23}H_{37}O_2N$), and alvanine ($C_{26}H_{43}O_3N$), alkaloids extracted from Central Asian Fritillaria Raddeana, were investigated in a model M-8 polarograph at Gorkiy State University. The concentration of raddeanine and raddeamine in the solution, and the values of the diffusion current were directly proportional; hence, the content of the above two alkaloids in solutions can be determined polarographically. There are 4 tables; and 1 Soviet reference.

SUBMITTED: September 9, 1959

Card 1/1

ABUBAKIROV, N.K.; YAMATOVA, R.Sh.

Glycosides in the plants of the genus Adonis. Part 1: Glycosides Adonis chrysocyathus Kook. f. et Thom. Zhur.ob.khim. 31 no.7: 2424-2427 Jl '61. (MIRA 14:7)

1. Institut khimii rastitel'nykh veshchestv AN Uzbekskoy SSR.
(Glycosides) (Adonis)

YAMATOVA, R.Sh.; ABUBAKIROV, N.K.

Glycosides from Apocynum androsaemifolium L. Part 2: Structure of apobyoside. Khim.prirod.soed. 1:15-22 '65. (MIRA 18:6)

1. Institut khimii rastitel'nykh veshchestv AN UzSSR.

YAMAYKIN, V.Ye.

Base wave radiation from the open end of a flat wave guide with symmetrical flanges of finite dimensions. Dokl. AN BSSR 3 no.6: 239-243 Je '59. (MIRA 12:10)

1. Predstavleno akademikom AN BSSR B.I. Stepanovym.
(Waves)

81114

S/142/60/000/01/006/022
E140/E463

9,1300

AUTHOR: Yamaykin, V.Ye.

TITLE: Approximate Method of Calculating the Directional Characteristics of the Fundamental Wave Radiation from the Apertures of Plane and Rectangular Waveguides with Symmetrical Flanges

PERIODICAL: Izvestiya vysshikh uchebnykh zavedeniy, Radiotekhnika, 1960, Nr 1, pp 60-68 (USSR)

ABSTRACT: Since the directional characteristic in the magnetic plane depends very weakly on flange width and may be calculated easily from well-known formulae, the greatest interest is presented by the development of a method for calculating directional characteristics in the electric plane. For the plane waveguide with symmetrical flanges, the aperture length in the magne'ic plane is assumed infinite. The electric field in the aperture is assumed approximately the same as in the regular part of the waveguide. The approximation coefficients are determined through a variational method. For the rectangular waveguide an experimental method was employed. With flanges of the order of a wavelength substantial changes in characteristic were found against the theoretically

Card 1/3

81114

S/142/60/000/01/006/022
E140/E463

Approximate Method of Calculating the Directional Characteristics of the Fundamental Wave Radiation from the Apertures of Plane and Rectangular Waveguides with Symmetrical Flanges

studied limiting cases $L_1 = 0$ (Ref 3), and $L_1 \to \infty$ (Ref 4) (L_1 is the flange width in wavelengths in the electric plane). The changes are expressed in indentations in the principal lobe. The effect of the flanges on the principal lobe width increases as the electrical width of the aperture decreases. For $d_1 > 1$ the effect of the flanges on the lobe width is negligible. The electrical width of aperture is the principal determining factor for lobe width. With $L_1 > 0.5$ the lobe width is close to that for the case of infinite flanges. With $L_1 = 0.25$ to 0.35, the principal lobe is narrowed by 30 to 40%. With small aperture dimensions ($d_1 < 0.1$) and $L_1 = 0.25$ the characteristic in the forward region is similar to that of a half dipole. An approximate method of calculating the directional characteristics of the H_{10}-wave from the open end of a rectangular waveguide with symmetrical flanges is then proposed based on the experimental evidence that the characteristic practically

Card 2/3

81114

S/142/60/000/01/006/022
E140/E463

Approximate Method of Calculating the Directional Characteristics of the Fundamental Wave Radiation from the Apertures of Plane and Rectangular Waveguides with Symmetrical Flanges

does not differ from that of the plane waveguide, which can be calculated theoretically. The agreement of experimental and approximately calculated characteristics is evident from Fig 9. There are 9 figures and 4 references, 3 of which are Soviet and 1 English.

SUBMITTED: April 21, 1959, initially
June 3, 1959, after revision

Card 3/3

ACCESSION NR: AP4040747 S/0142/64/007/002/0147/0153

TITLE: Nomogram for the calculation of the parameters of a linear radiator array

AUTHOR: Yamaykin, V. Ye.

SOURCE: IVUZ. Radiotekhnika, v. 7, no. 2, 1964, 147-153

TOPIC TAGS: antenna configuration, antenna directivity, antenna radiation pattern, antenna lobe, phased array antenna, electric antenna scanning

ABSTRACT: A nomogram consisting of straight lines has been calculated in order to be able to select the parameters of a linear dipole array such as to produce a specified principal-lobe direction (or scanning sector direction), and also to check on the uniqueness of the maximum of this lobe. The lines represent the function

Card 1/5

L 8724-65

ACCESSION NR: AP4040747

$$y = \left(n \pm \left[\frac{1}{2}\right]\right) x,$$

where

$$y = \sin \Theta_n - \beta_1$$

$$x = \frac{\lambda}{d}$$

To determine the direction of the principal maximum a rule with graduations proportional to the sine of the angles is placed on the plot along the specified value of λ/d, with the null of the scale at [illegible] principal maxima are [illegible] where the angle [illegible] defined [illegible] The nomogram can also be used to determine the period of the [illegible]

Card 2/5

L 8724-65

ACCESSION NR: AP4040747

array for specified conditions. The nomogram can also be modified to indicate the regions of uniqueness of the principal mode, and for [illegible] a [illegible] arrays with frequency scanning. Orig. art. [illegible] formulas.

Card 3/5

L 8724-65

ACCESSION NR: AP4040747

ENCLOSURE: 01

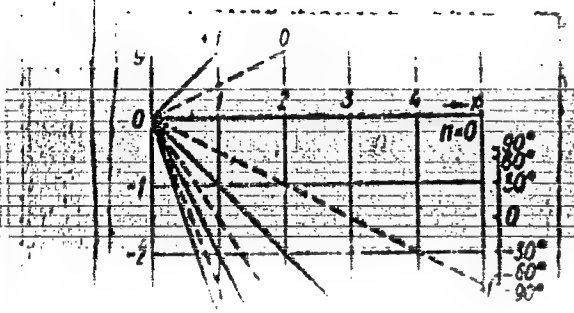

Nomogram for the design of a linear antenna array

Card 4/5

L 8724-65

ACCESSION NR: AP4040747

ENCLOSURE: 02

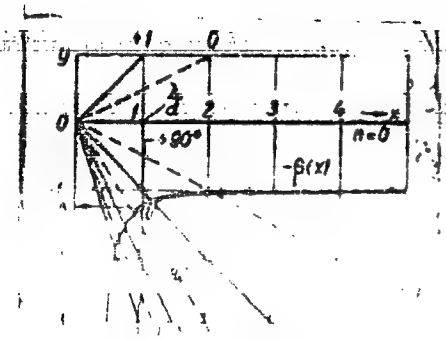

Example of the use of the nomogram for calculations. The dispersion curve is plotted for a ribbed slow-wave structure with radiating slots

Card 5/5

YAMBOR, MESHTER.

HUNGARY/Physical Chemistry - Electrochemistry. D.

Abs Jour : Ref Zhur - Khimiya, No 12, 1958, 39071

Author : Yambor, Meshter.
Inst : -
Title : A Polarographic Investigation of Tetrazole Derivatives of Sugar and of Sugar Formasans.

Orig Pub : Agrokem. es talaj., 1956, 5, No 1, 127-134

Abstract : A study was made on the polarographic reduction (R) of galactodiphenyl-tetrazolium chloride (I), its acetate (II), and product of the polarographic reduction of I, which is the corresponding formazane (III). It was shown that the oxidation-reduction potentials (ORP) of the materials investigated are very similar to each other, and also similiar to the ORP of triphemyltetrasolium chloride (IV), investigated previously (R. Zh. Kh., 1956, 12499). The reduction of I to III and subsequently to galactodiphenyl hydrazine proceeds

Card 1/2

DYACHIK, I. [Dachik I.]; YAMBRIKH, M. [Jambrich, M.], KOVACH, Ya. [Kovac, J.]

Some structural changes in polypropylene fibers during formation and single-axle deformation at normal and increased temperatures. Khim. volok. no.4:2-7 '64. (MIRA 18:4)

1. Issledovatel'skiy institut khimicheskikh volokon, g. Svit, Chekhoslovatskaya Sotsialisticheskaya Respublika.

SHCHUKIN, G., kand.tekhn.nauk; YAMBURENKO, V., inzh.

Searching for ways to extend the useful life of a marine diesel engine fuel feeding equipment. Mor.flot 22 no.12:33-35 D '62. (MIRA 15:12)

(Marine diesel engines—Fuel systems)

KOROLEV, Nikolay Ivanovich; YAMBURENKO, V.S., red.

[Use of fuels and lubricants on merchant ships] Ispol'zovanie topliv i masel na morskikh sudakh. Moskva, Transport, 1964. 106 p. (MIRA 17:12)

VASIL'YEV, Yuriy Nikolayevich; YAMBURENKO, V.S., red.

[Marine power plants; standard diagrms and composition] Sudovye silovye ıstanovki; tipovye skhemy i sostav. Moskva, Transport, 1965. 115 p. (MIRA 18:5)

MINKO, Vladimir Viktorovich; YAMBURENKO, Vladimir Sergeyevich; YACHIN, Vadim Aleksandrovich; SERBINOV, A.P., red.; YAROVA, L.V., red. izd-va; TIKHONOVA, Ye.A., tekhn.red.

[Handling of "Donbass"-type ships] Opyt tekhnicheskoi ekspluatatsii sudov tipa "Donbass." Moskva, Izd-vo "Morskoi transport," 1959. 104 p. (MIRA 13:2)
(Ship handling) (Marine engineering)

USSR/Engineering - Mechanical drives

Card 1/1 Pub. 128 - 1/31

Authors : Yamchenko, M. I., Engineer

Title : Industrial testing of stageless friction drives

Periodical : Vest. mash. 35/5, 3-5, May 1955

Abstract : The results obtained during industrial trial testing of various types of stageless friction drives are analyzed. The mechanical and power characteristics of these drives are described. Drawing; illustrations.

Institution : .....

Submitted : .....

YAMCHENKO, O.I.

More attention to the organoleptic test. Vop.pit. 13 no.5:49-50 S-O '54. (MLRA 7:9)

1. Iz Moskovskogo otdela sanitarnoy sluzhby Ministerstva rybnoy promyshlennosti SSSR.
(Food adulteration and inspection)

USSR/Medicine - Foods FD-3299

Card 1/1 Pub. 141 - 14/19

Author : Yamchenko, O. I.

Title : Certain features and practical methods of sanitary inspection of fish products.

Periodical : Vop. pit., 43-44, Jul/Aug 1955

Abstract : The standard practice for inspecting fish consists of probing the flesh with either a knife or wooden pin and them smelling it. Although this method is suitable for costly fish, such as smoked salmon, where cutting the meat would spoil the appearance of the product, it cannot be recommended for many other fish. The meat should be cut in order to properly determine its odor. Author also gives several other recommendations for inspecting fish. No references.

Institution : Moscow Division, Sanitation Service, Ministry of Fish Industry USSR

Submitted :

YAMCHENKO, O., vrach

Proper diet for a pilot. Grazhd.av. 18 no.8:29 Ag '61. (MIRA 14:8)

1. Aeroport Vnukovo.

(Air pilots)

PRODOLOBOV, N.V.; GERNER, V.F.; DOBRIN, B.Yu.; KIRSANOV, G.P.; PARSHIKOV, M.Ya.; PETUKHOV, M.I.; KRIZHANOVSKIY, V.A.; YAMCHUK, N.I.

Abstracts. Sov.med. 26 no.6:135-137 Je '62. (MIRA 15:11)

1. Iz Tyumenskoy gorodskoy infektsionnoy bol'nitsy (for Prodolobov). 2. Iz sel'skoy uchastkovoy bol'nitsy sovzhoza "Chernaya" Solikamskogo payonnogo otdela zdravookhraneniya (for Gerner). 3. Iz kafedry gospital'noy terapii Luganskogo meditsinskogo instituta (for Dobrin). 4. Iz respublikanskoy klinicheskoy bol'nitsy Mordovskoy ASSR (for Kirsanov, Parshikov). 5. Iz propedevticheskoy khirurgicheskoy kliniki Kuybyshevskogo meditsinskogo instituta (for Petukhov). 6. Iz gospital'noy khirurgicheskoy kliniki i kafedry patologicheskoy anatomii Chelyabinskogo meditsinskogo instituta (for Krizhanovskiy, Yamchuk).

(MEDICINE—ABSTRACTS)

YAMENFEL'D, G., yurist

Our consultations. Sov. profsoiuzy 18 no.19:46-47 O '62. (MIRA 15:9)

(Employees, Dismissal of) (Travel costs)
(Labor and laboring classes)

YAMENFEL'D, G., yurist

Notes on books. Sov. profsoiuzy 19 no.16:46 Ag '63. (MIRA 16:10)

YAMENFEL'D, Gustav Maksovich; KIRAKOZOVA, N.Sh., red.; MAMONTOVA, N.N., tekhn. red.

[Hiring and dismissal of state commerce workers]Priem i uvol'nenie rabotnikov gosudarstvennoi torgovli. Moskva, Gostorgizdat, 1962. 86 p. (MIRA 16:4)
(Russia--Commerce) (Employees, Dismissal of)
(Recruiting of employees)

YAMENFEL'D, G., yurist

"Rights of the factory and plant local committee" by V.I. Nikitinskii, A.I. Stavtseva. Reviewed by G. IAmenfel'd. Sov. profsoiuzy 19 no.8:31 Ap '63. (MIRA 16:6)

(Trade unions) (Nikitinskii, V.I.)
(Stavtseva, A.I.)

MAGAZANIK, L.G., YAMIKHELSON, M.YA., ROZHKOVA, YE.K.

"Data on the evolution of cholinoreception of locomotor muscles."

Report submitted, but not presented at the 22nd International Congress of Physiological Sciences.
Leiden, the Netherlands 10-17 Sep 1962

URAZBAYEV, M.T.; RASHIDOV, T.; YAMINOVA, R.Sh.

Investigating vertical vibrations of multistory edifices and buildings caused by earthquakes taking foundation pliability into consideration. Izv.AN Uz.SSR.Ser.tekh.nauk 9 no.5:26-36 '65. (MIRA 18:10)

1. Institut mekhaniki i Vychislitel'nyy tsentr AN UzSSR.

KOZLOV, V.P.; YAMINSKAYA, O.Ya.

Restoration of the fertility of eroded turf-podzolic soils in a grassland system of agriculture (exemplified by collective farms of Dmitrov District, Moscow Province). Trudy Pochv.inst. 40:109-118 '53. (MLRA 6:11)
(Moscow Province--Soil fertility) (Soil fertility--Moscow Province)